1-800-BOLLARDS

The Bollard Experts

REVISIONS			
LTR	DESCRIPTION	DATE	APPVD

COMMENTS

SPECIFICATIONS
HEIGHT: 36"
DIAMETER: 7.32"
WALL THICKNESS: 0.134"

- ☐ 7" BOLLARD COVER (6" NOMINAL BOLLARD SIZE)
  - ☐ CSS7010 SCHED 10 STAINLESS STEEL COVER
- ☐ STAINLESS STEEL BOLLARD COVER FINISH
  - ☐ POLISHED #4
- ☐ SELECT DESIRED STAINLESS STEEL BOLLARD MATERIAL:
  - ☐ TYPE 304
  - ☐ TYPE 316
- ☐ SELECT DESIRED BOLLARD CAP STYLE:
  - ☐ DOME (SHOWN)
  - ☐ STANDARD FLAT
  - ☐ REVEAL
  - ☐ SLOPED
- ☐ COVER HEIGHT SELECTION FROM:
  - ☐ BASE OF BOLLARD
  - ☐ TOP OF BOLLARD _____INCHES

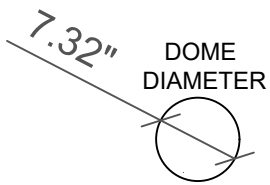

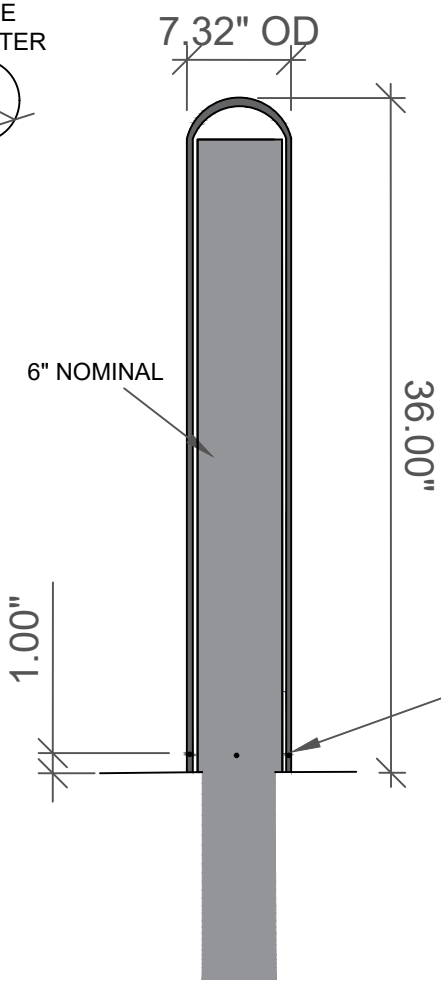

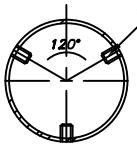

1/4-20 SET SCREWS
X 3 PLACES

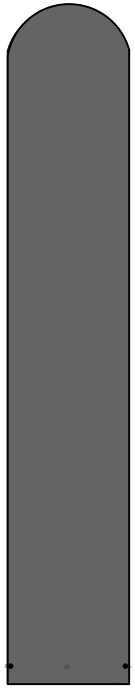

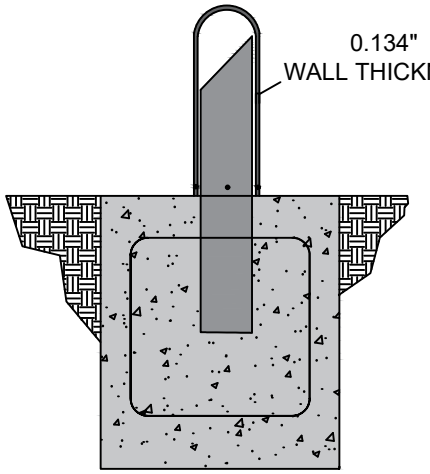

DOME (SHOWN) STANDARD FLAT REVEAL SLOPED

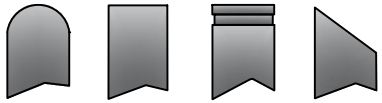

NOTES:
1. INSTALLATION TO BE COMPLETED IN ACCORDANCE WITH MANUFACTURER'S SPECIFICATIONS.
2. DO NOT SCALE DRAWING.
3. THIS DRAWING IS INTENDED FOR USE BY ARCHITECTS, ENGINEERS, CONTRACTORS, CONSULTANTS AND DESIGN PROFESSIONALS FOR PLANNING PURPOSES ONLY. THIS DRAWING MAY NOT BE USED FOR CONSTRUCTION.
4. ALL INFORMATION CONTAINED HEREIN WAS CURRENT AT THE TIME OF DEVELOPMENT BUT MUST BE REVIEWED AND APPROVED BY THE PRODUCT MANUFACTURER TO BE CONSIDERED ACCURATE.
5. CONTRACTOR'S NOTE: FOR PRODUCT AND COMPANY INFORMATION VISIT www.CADdetails.com/info AND ENTER REFERENCE NUMBER 5046-027.

APPLICATION	
NEXT ASSY	USED ON

SERIES NUMBER:	XX-S060-XX	CAGE CODE: 6NQJ8 / SIZE:	DRAWING NUMBER: 6in Cutsheet Size A - R1
PRODUCT FAMILY:	FIXED BOLLARD		
PRODUCT CLASS:	STANDARD OR CUSTOMER DEFINED	DRAWN BY: AJA	DRAWING REV:
PRODUCT LINE:	BOLLARD	CHECKED BY:	SHEET: 1 OF 1
PRODUCT SUB LINE:	COVER	APPROVED BY:	RELEASE DATE:

1-800-BOLLARDS, Inc.
10 Hughes Suite A105
Irvine, CA 92618
PHONE: 1-800-BOLLARDS
WEB: WWW.1800BOLLARDS.COM
EMAIL: INFO@1800BOLLARDS.COM

TITLE: BOLLARD, COVER